CRISTADUR®

Manufactured by **SCHOCK** - THE WORLD OF **GRANITE** SINKS

SCHOCK has selected Novanni as their exclusive distributor of Cristadur products in Canada.

Around 80% of the material used in Schock sinks is quartz, the hardest constituent of granite. The granite used in Schock sinks is combined with high-grade acrylic to produce a hardened composite material that is resistant to cracks and dirt and also responsible for the long life of the sinks. Materials produced by Schock have been specifically developed to meet the requirements in modern kitchens and withstand everyday use without a trace. Schock sinks are extremely durable and easy to clean – red wine, coffee and heavy pans leave absolutely no marks.

Silky smooth finish / Antibacterial / Heat resistant to 550˚ degrees

Novanni Elite Quick Reference

CRISTADUR®
UNDERMOUNT

JCEG100U / PG. 42

GALAXY N-100

JCEM100U / PG. 42

MONTANO N-100XL

JCEA175U / PG. 42

ALIVE N-175

JCEA200U / PG. 42

ALIVE N-200

JCEAS175U / PG. 44

NEW

ASPIRE N-175

JCEAS200U / PG. 44

NEW

ASPIRE N-200

CRISTADUR®
TOP MOUNT

JCEG100 / PG. 43

GALAXY N-100

JCEM100 / PG. 43

MONTANO N-100XL

JCEA175 / PG. 43

ALIVE N-175

JCEA200 / PG. 43

ALIVE N-200

JCEAS175 / PG. 44

NEW

ASPIRE N-175

JCEAS200 / PG. 44

NEW

ASPIRE N-200

CRISTADUR®
UNIVERSAL MOUNT

JCES100 / PG. 43

NEW

SOHO N-100S

Cristadur® Key Features

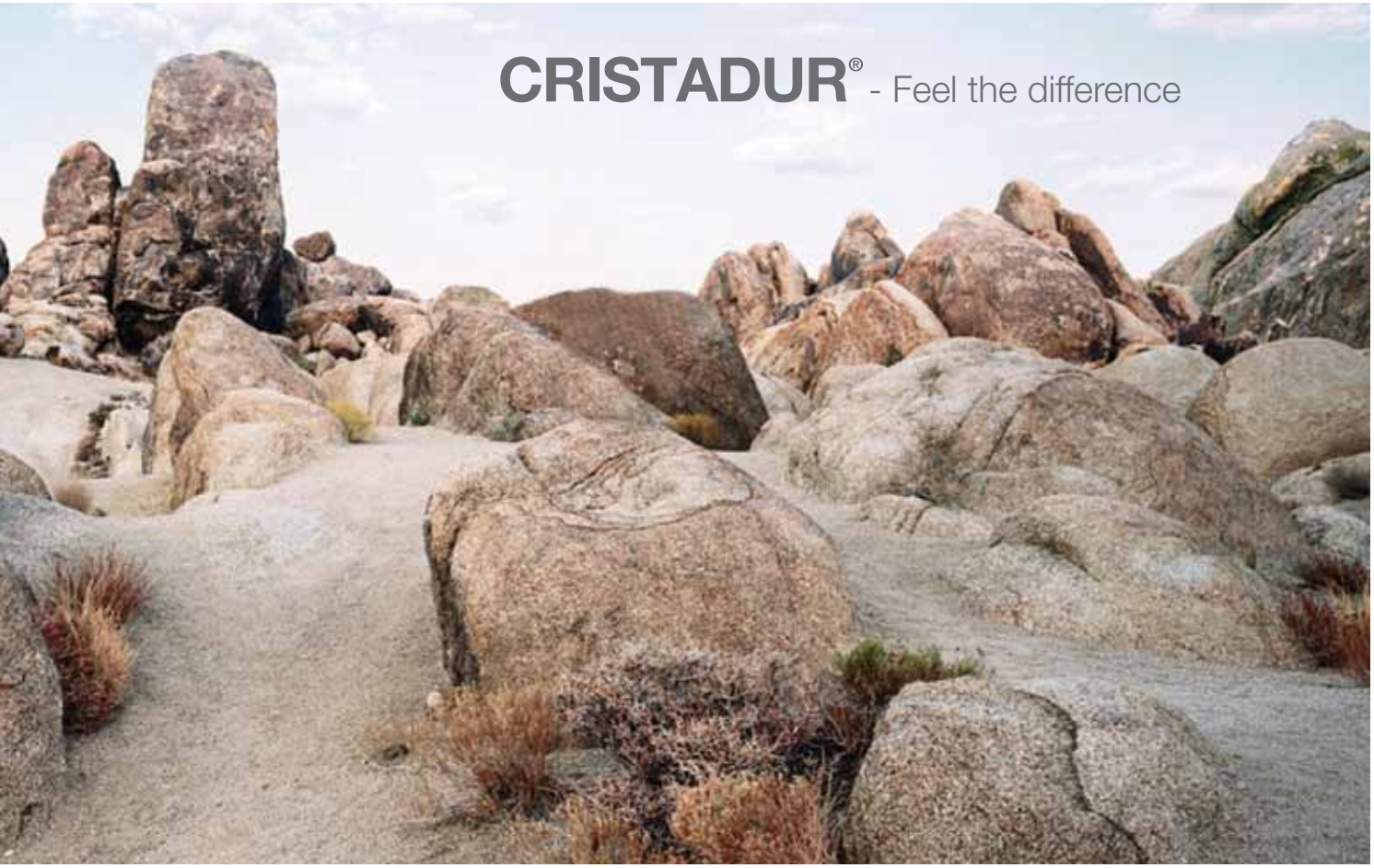

SCHOCK invented the granite sink more than 30 years ago. Around 75% of the almost 2 million granite sinks produced in the world today on an annual basis are manufactured with the Schock method, underlining the company's internationally leading position in this technology.

CRISTADUR® material has an ultra-fine structure, resulting in unprecedented ease of care and featuring a dirt repellent effect (the dirt simply runs off). Dirt that could be a breeding ground for bacteria finds it impossible to stick to the material's surface. It simply runs off.

An added benefit of CRISTADUR® is its silky-smooth finish – it's wonderfully soft to the touch while offering maximum resistance to dirt and scratches.

All Schock materials boast the following properties:

- Antibacterial (exclusive to Schock)
- Easy to clean
- Food-safe
- UV-stable
- Stain-resistant
- Extremely tough and impact-resistant thanks to the very high quartz content

Cristadur Key Features

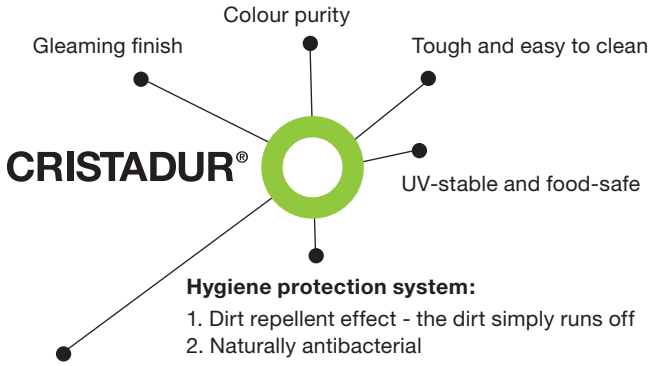

MADE IN GERMANY

Manufactured according to the most stringent quality and environmental standards in the world and subscribes to the **Environmental Pact of Bavaria.**

Immaculately Pore-Free

HYGIENE PROTECTION SYSTEM

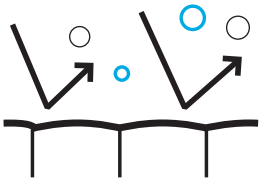

CRISTADUR®
Dirt repellent effect - the dirt simply runs off

CRISTADUR® - Feel the difference

SCHOCK's premium material has an ultra-fine structure, resulting in a gleaming finish and unprecedented ease of care. Dirt that could be a breeding ground for bacteria finds it impossible to stick to the materials surface.

It simply runs off.

SCHOCK **CRISTADUR®**

Pore-free, smooth, fine - **the dirt simply runs off**

Competitor's Material

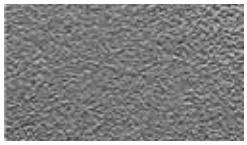

Porous, rough, coarse - **the dirt has more to stick to**

Cristadur® is available in seven styles and five colours in either a top mount or undermount.

Cristadur® now offers three new sink styles and all sinks are now available in Chocolate.

SOHO N-100S
shown in chocolate - **NEW**

GALAXY N-100
shown in black

MONTANO N-100XL
shown in bronze

ALIVE N-175
shown in magnolia

ALIVE N-200
shown in steel

ASPIRE N-175
shown in steel

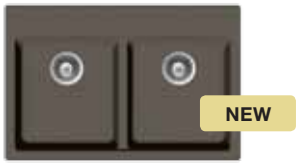

ASPIRE N-200
shown in bronze

GALAXY N-100 | $845

Undermount shown in Black

Min. Cabinet Width: 27" (69cm)
Finish: Granite
Size: 18¼" x 23⅝" x 8⅝"

JCEG100UBL Black
JCEG100UBZ Bronze
JCEG100UCH Chocolate
JCEG100UMG Magnolia
JCEG100UST Steel

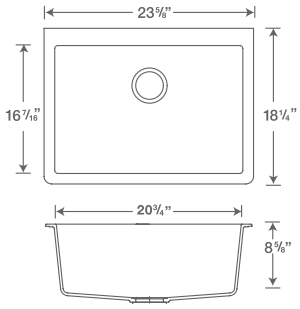

MONTANO N-100XL | $970

Undermount shown in Bronze

Min. Cabinet Width: 36" (91cm)
Finish: Granite
Size: 18½" x 33" x 9 7/16"

JCEM100UBL Black
JCEM100UBZ Bronze
JCEM100UCH Chocolate
JCEM100UMG Magnolia
JCEM100UST Steel

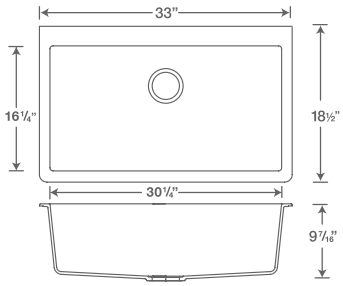

ALIVE N-175 | $990

Undermount shown in Magnolia

Min. Cabinet Width: 36" (91cm)
Finish: Granite
Size: 22" x 33" x 9½"

JCEA175UBL Black
JCEA175UBZ Bronze
JCEA175UCH Chocolate
JCEA175UMG Magnolia
JCEA175UST Steel

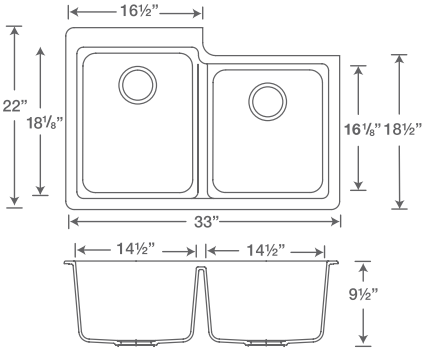

ALIVE N-200 | $980

Undermount shown in Steel

Min. Cabinet Width: 36" (91cm)
Finish: Granite
Size: 18½" x 33" x 9½"

JCEA200UBL Black
JCEA200UBZ Bronze
JCEA200UCH Chocolate
JCEA200UMG Magnolia
JCEA200UST Steel

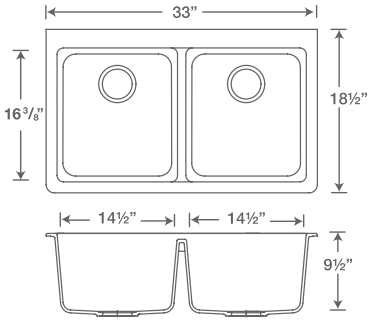

Made in Germany

SOHO N-100S | $795

Universal Mount shown in Chocolate

NEW

Min. Cabinet Width: 24" (61cm)
Finish: Granite
Size: 16 15/16" x 17 3/4" x 7 7/8"

JCES100BL	Black
JCES100BZ	Bronze
JCES100CH	Chocolate
JCES100MG	Magnolia
JCES100ST	Steel

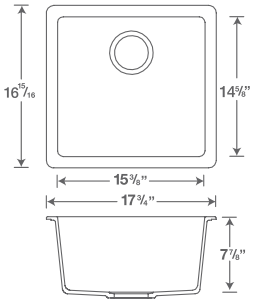

GALAXY N-100 | $795

Top Mount shown in Black

Min. Cabinet Width: 27" (69cm)
Finish: Granite
Size: 21" x 23 5/8" x 8 5/8"

JCEG100BL	Black
JCEG100BZ	Bronze
JCEG100CH	Chocolate
JCEG100MG	Magnolia
JCEG100ST	Steel

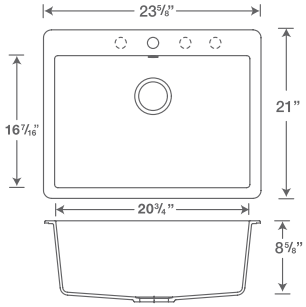

MONTANO N-100XL | $920

Top Mount shown in Bronze

Min. Cabinet Width: 36" (91cm)
Finish: Granite
Size: 20 7/8" x 33" x 9 7/16"

JCEM100BL	Black
JCEM100BZ	Bronze
JCEM100CH	Chocolate
JCEM100MG	Magnolia
JCEM100ST	Steel

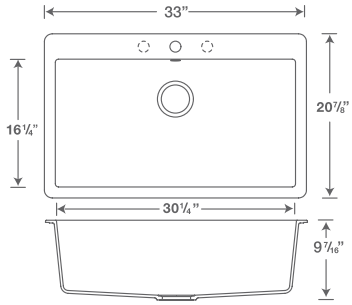

ALIVE N-175 | $940

Top Mount shown in Magnolia

Min. Cabinet Width: 36" (91cm)
Finish: Granite
Size: 22" x 33" x 9 1/2"

JCEA175BL	Black
JCEA175BZ	Bronze
JCEA175CH	Chocolate
JCEA175MG	Magnolia
JCEA175ST	Steel

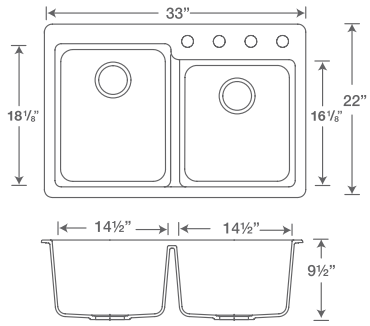

ALIVE N-200 | $930

Top Mount shown in Steel

Min. Cabinet Width: 36" (91cm)
Finish: Granite
Size: 22" x 33" x 9 1/2"

JCEA200BL	Black
JCEA200BZ	Bronze
JCEA200CH	Chocolate
JCEA200MG	Magnolia
JCEA200ST	Steel

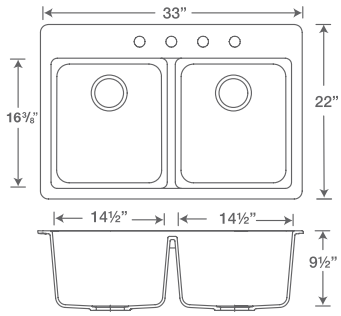

CRISTADUR® UNDERMOUNT BOWLS

Available August 2012

ASPIRE N-175 | $989

Undermount shown in Steel

NEW

Min. Cabinet Width: 33" (84cm)
Finish: Granite
Size: 31" x 20½" x 9"

JCEAS175UBL	Black
JCEAS175UBZ	Bronze
JCEAS175UCH	Chocolate
JCEAS175UMG	Magnolia
JCEAS175UST	Steel

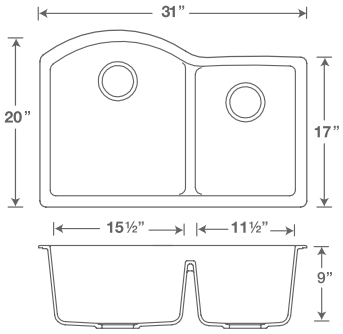

ASPIRE N-200 | $975

Undermount shown in Bronze

NEW

Min. Cabinet Width: 33" (84cm)
Finish: Granite
Size: 31" x 20½" x 9"

JCEAS200UBL	Black
JCEAS200UBZ	Bronze
JCEAS200UCH	Chocolate
JCEAS200UMG	Magnolia
JCEAS200UST	Steel

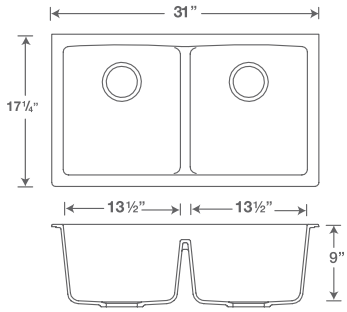

CRISTADUR® TOP MOUNT BOWLS

Available August 2012

ASPIRE N-175 | $939

Top Mount shown in Steel

NEW

Min. Cabinet Width: 33" (84cm)
Finish: Granite
Size: 31" x 20½" x 9"

JCEAS175BL	Black
JCEAS175BZ	Bronze
JCEAS175CH	Chocolate
JCEAS175MG	Magnolia
JCEAS175ST	Steel

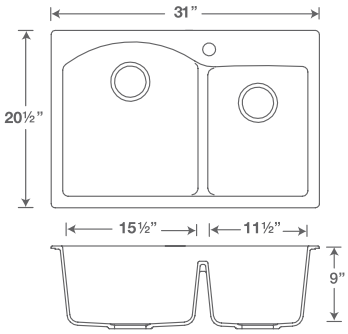

ASPIRE N-200 | $925

Top Mount shown in Bronze

NEW

Min. Cabinet Width: 33" (84cm)
Finish: Granite
Size: 31" x 20½" x 9"

JCEAS200BL	Black
JCEAS200BZ	Bronze
JCEAS200CH	Chocolate
JCEAS200MG	Magnolia
JCEAS200ST	Steel

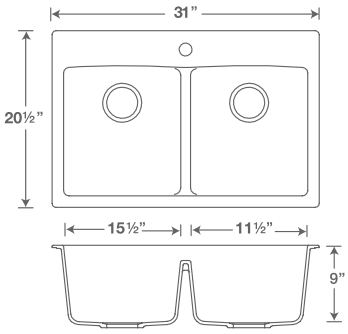

Made in Germany